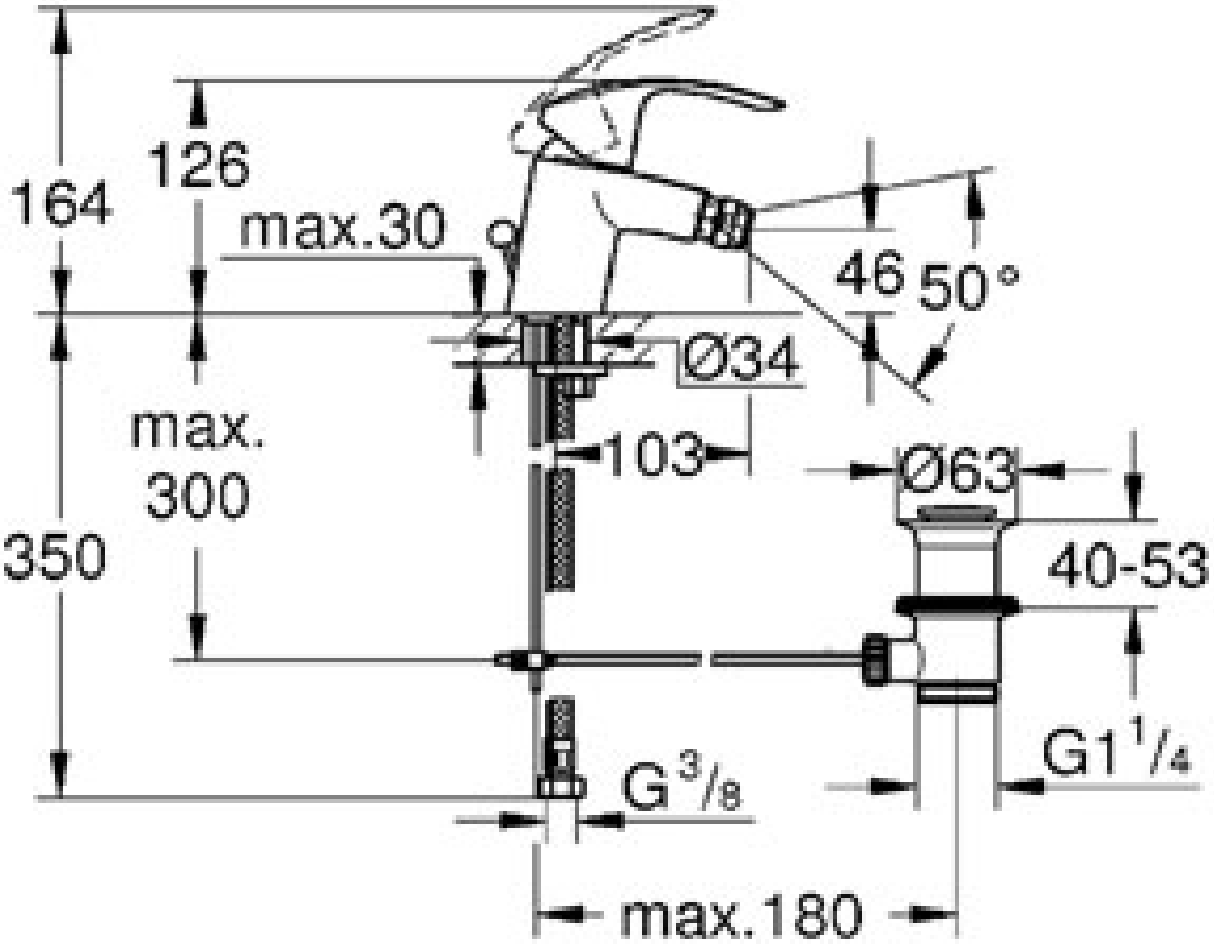
164
126
max.30
46
50°
Ø34
max.
300
103
Ø63
350
40-53
G1 1/4
G 3/8
max.180

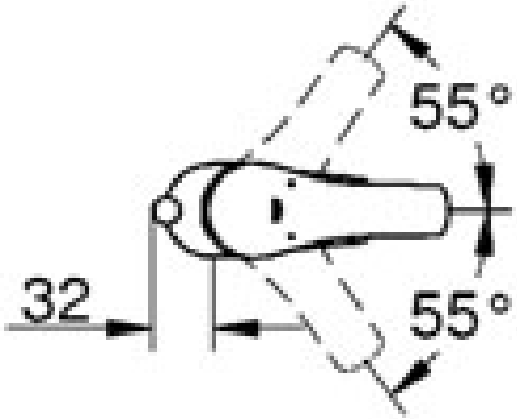
55°
32
55°

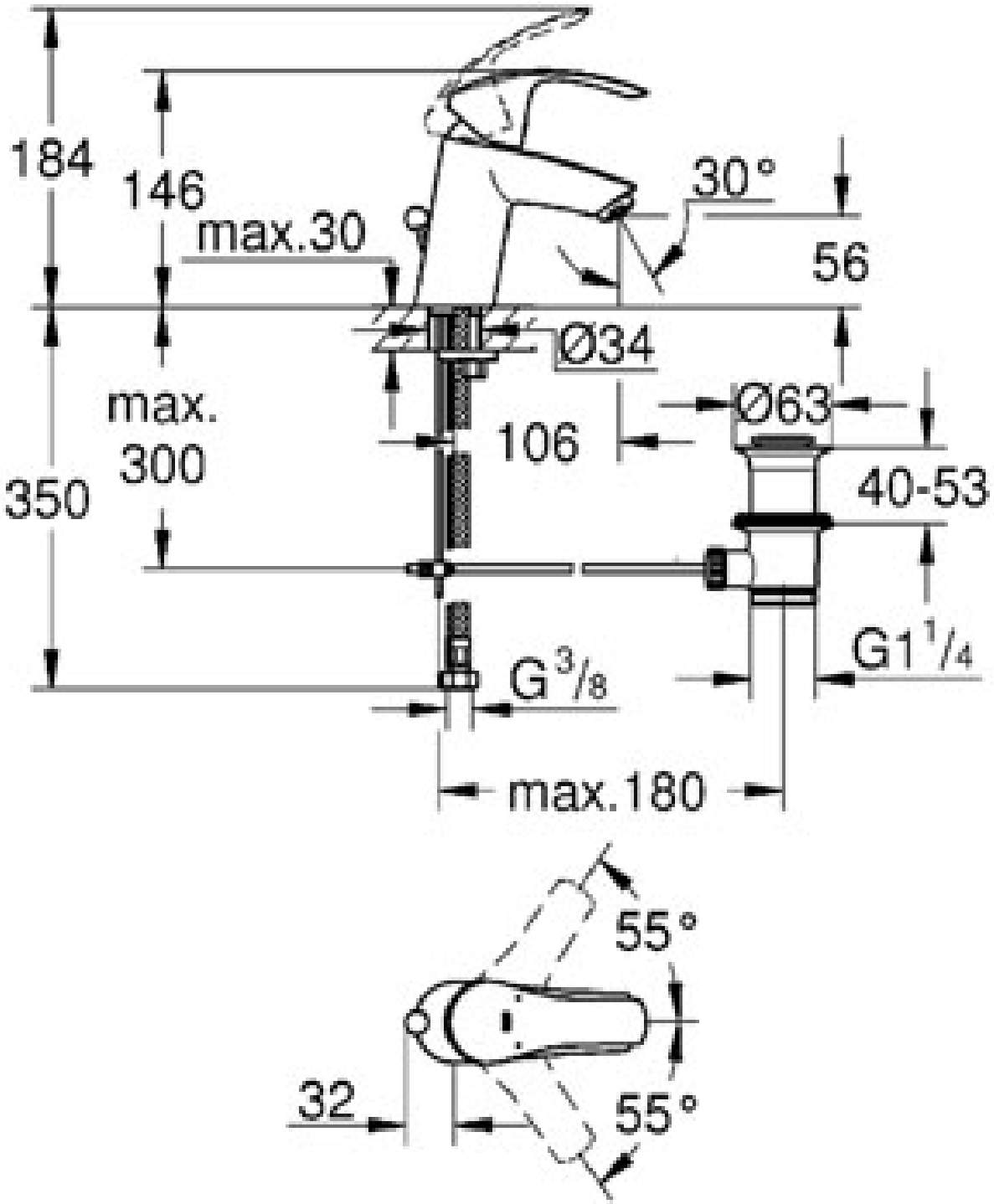
184
146
max.30
30°
56
Ø34
max.
300
350
106
Ø63
40-53
G1 1/4
G 3/8
max.180
55°
32
55°

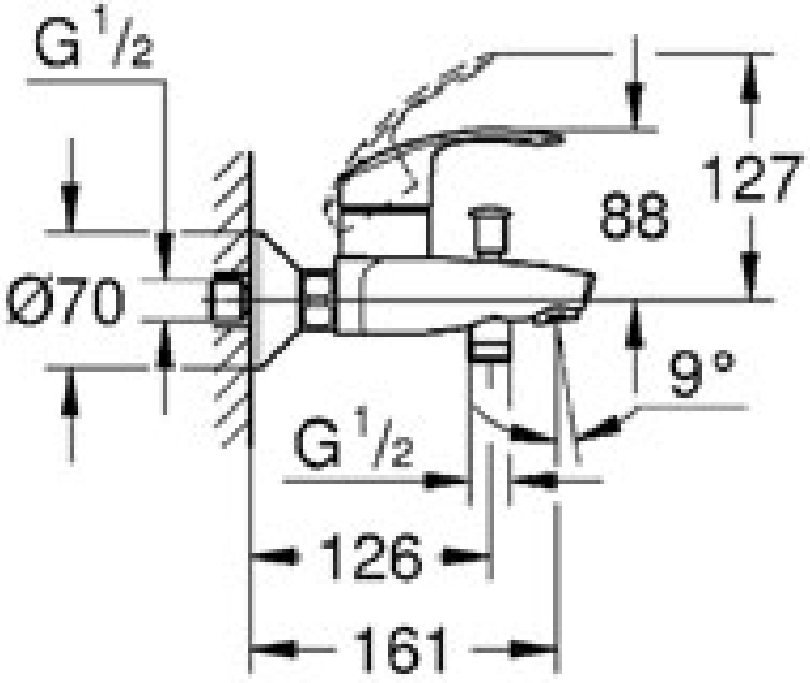
G 1/2
127
88
Ø70
9°
G 1/2
126
161

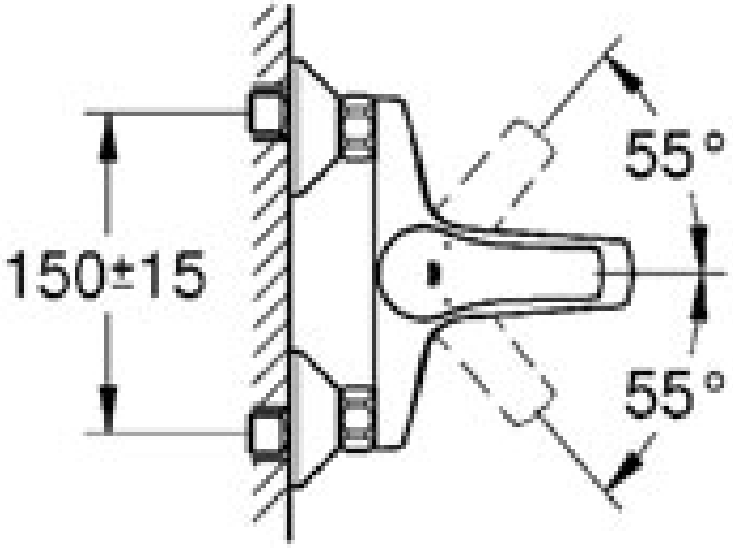
55°
150±15
55°

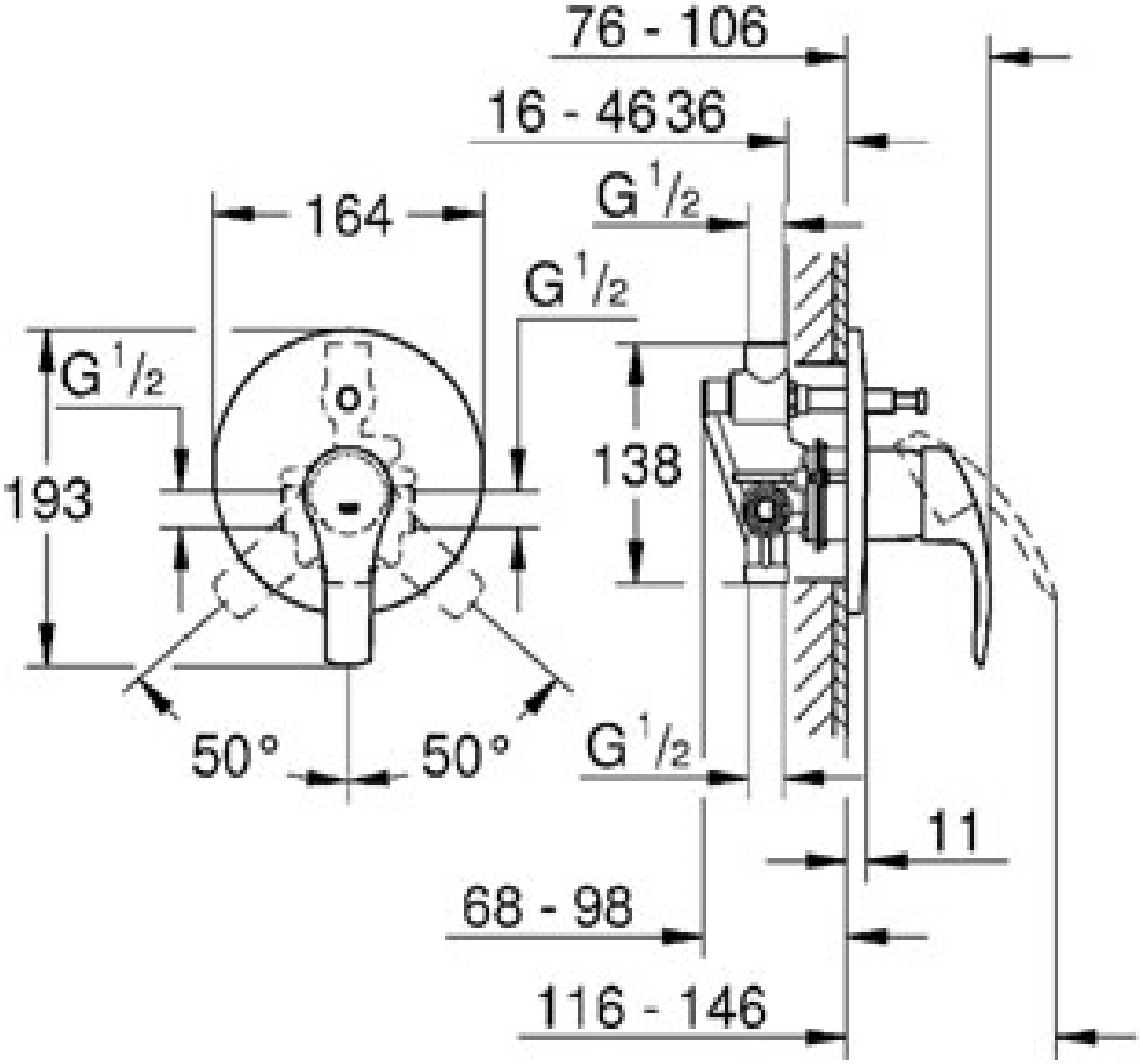
76 - 106
16 - 46 36
G 1/2
164
G 1/2
G 1/2
193
138
50°
50°
G 1/2
11
68 - 98
116 - 146

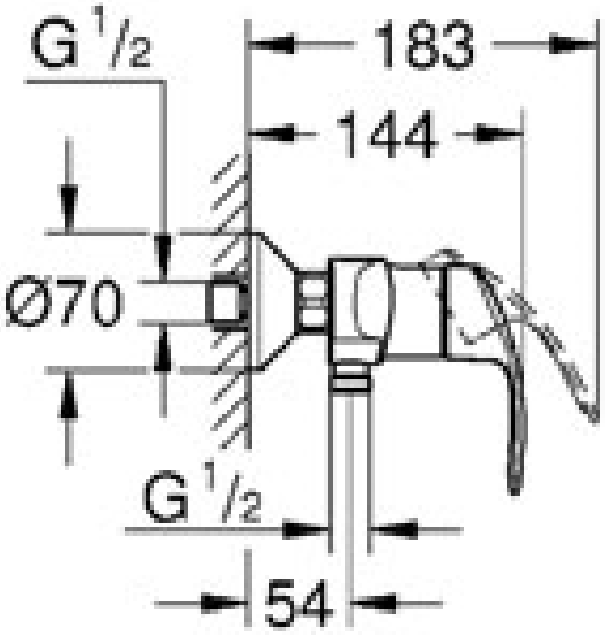
G 1/2
183
144
Ø70
G 1/2
54

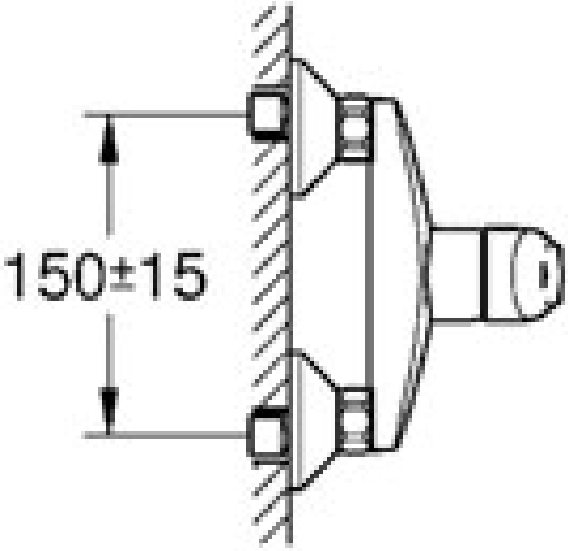
150±15

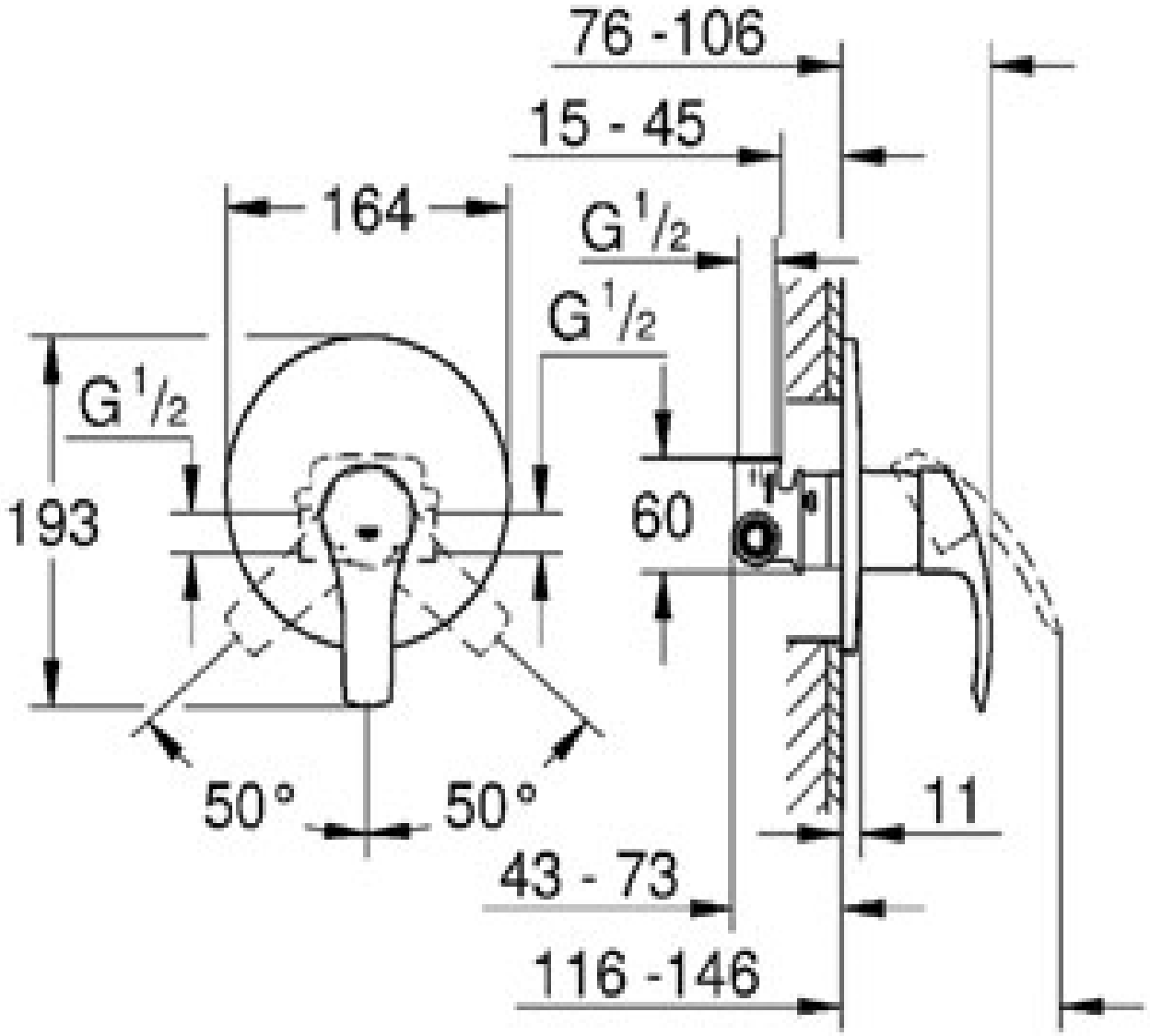
76 -106
15 - 45
164
G 1/2
G 1/2
G 1/2
193
60
50°
50°
11
43 - 73
116 -146